Common Industry Practices

2024 Edition









MBMA
METAL BUILDING MANUFACTURERS ASSOCIATION®
Research | Leadership | Education

Copyright by
MBMA
1300 Sumner Ave.
Cleveland, OH 44115-2851

COPYRIGHT 2024

Published by the Metal Building Manufacturers Association

ALL RIGHTS RESERVED. This publication is a copyrighted work owned by the Metal Building Manufacturers Association ("MBMA"). Without advance written permission from the copyright owner, no part of this book may be reproduced, distributed, or transmitted in any form or by any means, including, without limitation, electronic, optical, or mechanical means (by way of example and not limitation, photocopying or recording by or in an information storage and retrieval system). For information on permission to copy material exceeding fair use, please contact MBMA at 1300 Sumner Ave., Cleveland, OH 44115-2851. Phone: (216) 241-7333.

This publication is intended as a statement of common industry practices in metal building construction. Use of the information contained in this document should not be considered by the user as a substitute for the advice of a registered professional engineer, attorney, or other professional. If such advice is required, you should seek the services of a registered professional engineer, licensed attorney, or other professional.

Although every effort has been made to present accurate and sound information, the responsibility for an individual project rests with the design professional and contract parties. MBMA assumes no responsibility or liability whatsoever for the application of this information to the design or construction of any specific building system.

Cover photographs provided by MBMA.

Publication date: February 2026

Second printing

Printed in the United States of America

Common Industry Practices

Section 1 – Introduction

1.1 Introduction

Throughout the history of the Metal Building Industry, certain practices relating to the sale, design, manufacture and erection of Metal Building Systems have become traditional. The following sections contain a summary of those common practices, and the generally accepted responsibilities of the parties involved in each step of the process.

This set of Common Industry Practices is not intended as a standard or as a specific guideline for the sale, design, manufacture or erection of any particular Metal Building System. Rather, it is intended to serve as a general checklist to assist the parties in preparing specific Order or Contract Documents governing the transaction in question. If the parties so desire, these Common Industry Practices can be incorporated by reference, in whole or in part, into the Order or Contract Documents for the sale of a Metal Building System. Wherever there is a conflict between the Order or Contract Documents and these Practices, however, the Order or Contract Documents shall prevail.

For a specific construction project, certain parties may perform more than one function. For example, the Builder may commonly perform the functions of the Contractor and General Contractor.

In a typical sale of a Metal Building System there are at least two independent written agreements, (1) the Order Documents and (2) the Contract Documents.

1.2 Definitions

Manufacturer -The party that designs and fabricates the materials included in the Metal Building System in accordance with the Order Documents as provided herein. If the Manufacturer sells the Metal Building System directly to the End Customer, the Manufacturer also has the responsibilities of the Builder as described below.

Contractor - The party that has responsibility for providing the materials and erection of the Metal Building System as specified by the Contract Documents.

General Contractor -The party that has the overall responsibility for providing all materials and work for the Construction Project (including the Metal Building System) as specified by the Contract Documents. The General Contractor may also function as the Contractor and/or Construction Manager.

Construction Manager -Usually in lieu of a General Contractor, the party that has the overall responsibility for coordinating all materials and work for the Construction Project (including the Metal Building system) as specified by the Contract Documents. The Construction Manager may also function as the Contractor.

Erector/Assembler - The party that erects the Metal Building System. Either the Builder, Contractor, General Contractor or another party pursuant to an agreement with the Builder, Contractor, General Contractor or End Customer may act as the Erector.

Builder - The party responsible for ordering the Metal Building System from the Manufacturer. The Builder is an independent contractor and is not an agent for the Manufacturer.

For any specific Construction Project, the Builder may also act as Contractor, Erector, General Contractor and/or Construction Manager. The Builder may or may not provide professional design services. In any event, the Builder is responsible for ordering and receiving the Metal Building System.

The Builder is responsible for conveying to the Contractor or End Customer the engineering data, plans and other documents or information that are provided by the Manufacturer.

End Customer - The party who will be the initial owner of the Construction Project for the purpose of occupying the building or leasing or reselling the completed structure for purposes of occupancy by others. As used herein, the term includes any agent of the End Customer including any Design Professional or General Contractor retained by the End Customer. In those situations where the Builder also meets the definition of the End Customer, the relationship to the Manufacturer remains that of a Builder.

If the End Customer acts as the General Contractor or Construction Manager, they may purchase the Metal Building System from the Builder or may purchase the Metal Building System from a Contractor. If the End Customer purchases the Metal Building System from a Builder, the End Customer also has the responsibility for erection of the Metal Building System as provided herein.

Registered Design Professional - An architect or engineer retained by the End Customer or General Contractor or Construction Manager or the Builder to assist in the preparation of design specifications for the Construction Project including the Metal Building System and its erection, and where appropriate, to assist in supervising the construction process for compliance with the Contract Documents.

For a specific Construction Project, the responsibilities and rights of the Registered Design Professional and the End Customer (or General Contractor or Construction Manager or Builder) are defined in a separate agreement for professional services between the parties.

Registered Design Professional in Responsible Charge - In accordance with the International Building Code, this is the Registered Design Professional who reviews and coordinates certain

aspects, as determined by the building official, for compatibility with the design of the building including submittal documents.

Order Documents - The documents normally required by the Manufacturer in the ordinary course of entering and processing an order by which the Builder orders the Metal Building System from the Manufacturer. The Order Documents consist of a Contract or Purchase Order, the Manufacturers' written acceptance if a Purchase Order is used and any other writings, drawings, specifications or other documents required by the Manufacturer in the ordinary course of entering and processing an order. Unless specifically agreed in writing by the Manufacturer, specifications and drawings prepared by the Builder, End Customer or its Design Professional are not part of the Order Documents.

Contract Documents - The documents that define the material and work to be provided by the Contractor or the General Contractor (or the Builder, if acting in these capacities) for a Construction Project. The Contract Documents consist of a written agreement defining the scope of work, contract price, schedule and other relevant terms of the agreement. Typically, they include the Design Professional's drawings and specifications (if any), and may include the erection instructions and drawings of the Manufacturer and drawings of any other subcontractor and any general or special terms and conditions referenced and bound with the Contract Documents.

Construction Project - Includes all material and work necessary for the construction of a finished structure for occupancy by the End Customer, such as site preparation, foundations, mechanical, electrical work, etc. The Metal Building System and the erection of the Metal Building System are both elements of the Construction Project.

Section 2 – Sale of a Metal Building System

2.1 General

All materials included in the Metal Building System are in accordance with the Manufacturer's commonly employed details and standards unless otherwise specified in the Order Documents.

2.1.1 Generally Included Parts

The parts included in the sale of a Metal Building System are established solely by the Order Documents between the Manufacturer and the Builder. A typical sale may include the following parts:

1. The end and interior frames of the Metal Building System including columns, rafters, and flange bracing.
2. Horizontal load bracing, purlins, girts, eave members, end wall columns, base angles, and other structural framing required to support the roof and wall coverings of the Metal Building System.
   Nuts and bolts for steel to steel connections of the structural framing of the Metal Building System. A sufficient number of bolting assemblies are provided to enable preinstallation verification testing as discussed in Section 6.10.2 for pretensioned joints.
3. Exterior metal roof and wall covering of the Metal Building System including trim, fasteners, sealants and closures.

2.1.2 Accessories

The following items may be provided by the Manufacturer and included in the Metal Building System, but will be provided only when expressly specified by the Builder in the Order Documents:

1. The personnel doors, windows, slide doors, translucent panels and ventilators that are installed in the exterior metal walls and roofs of the Metal Building System. These items will include the necessary hardware, framing, trim and fasteners to be installed per the Manufacturer's standards.
2. Framed openings for doors (such as overhead, roll-up, slide, hangar, etc.).
3. Glass and glazing when included in the Manufacturer's standards.
4. Fascias, canopies and overhangs connected to the Metal Building System.
5. Eave gutters, valley gutters, and the external downspouts to the bottom of the Metal Building System wall.
6. Crane runway beams, supports, crane rail assemblies and crane bracing.
7. Mezzanine or floor framing, joists and steel deck.
8. Insulation and insulation accessories for the Metal Building System roof and walls.
9. Roof curbs and sub-framing for roof curbs.
10. Lintels, if attached to the metal building framing, and if loads from such lintels are provided to the Manufacturer to be incorporated into the design of the Metal Building System.

2.1.3 Other Materials

The following items are not commonly available from the Manufacturer:

1. Materials for foundations or concrete or masonry walls such as reinforcing steel, concrete and masonry material, anchor rods, embedments, anchor rod templates, leveling plates, tie rod or any other materials required to set or connect to masonry or concrete.
2. Interior downspouts, underground drains and connections.
3. Fire protection materials and systems.
4. Interior framing and finishing materials.
5. Cranes, crane runway stops and material handling systems.
6. Electrical equipment, apparatus and wiring.
7. Mechanical equipment such as fans, heating, air conditioning, and ventilation units.
8. Miscellaneous iron or steel including, but not limited to, stairs, ladders, railings, platforms, conveyors, hangers, loose lintels etc.
9. Overhead, roll-up, or other industrial type doors.
10. Flashing or counter flashing material used for tie-in to materials not included in the Metal Building System.
11. Lateral support of interior walls that are not part of the Metal Building System.
12. Material supplied to architecturally exposed structural steel (AESS) standards.

2.2 Changes in Order Documents or Contract Documents

Changes in the Order Documents must be in writing and must be agreed to by the Builder and the Manufacturer (including any adjustment to the contract amount and schedule) prior to the Manufacturer proceeding with such changes. Changes in the Contract Documents by the End Customer must be in writing and must be agreed to by the Builder (including any adjustment in the contract amount and schedule). Changes in the Contract Documents have no effect on the Order Documents. If the Contract Documents are changed in such a way as to require a change in the Order Documents, the Builder must obtain a change to the Order Documents in accordance with the provisions of this subsection.

Section 3 – Design of a Metal Building System

3.1 Design Responsibility

It is the responsibility of the Manufacturer, through the Manufacturer's Engineer, to design the Metal Building System to meet the specifications including the design criteria and design loads incorporated by the Builder into the Order Documents. The Manufacturer is not responsible for making an independent determination of any local codes or any other requirements not part of the Order Documents.

The Manufacturer is responsible only for the structural design of the Metal Building System it sells to the Builder. The Manufacturer or the Manufacturer's Engineer is not the Registered Design Professional, Engineer of Record for the Construction Project, or Registered Design Professional in Responsible Charge for the owner. The Manufacturer is not responsible for the design of any components or materials not sold by it or their interface and connection with the Metal Building System unless such design responsibility is specifically required by the Order Documents.

Therefore, it is highly recommended that the End Customer hire a Registered Design Professional or Engineer of Record (EOR) who would be responsible for specifying the design criteria for the Metal Building System to be used by the Builder and Manufacturer including all applicable design loads. The EOR is also typically responsible for the design of any components or materials not sold by the Manufacturer and the interface and connection with the Metal Building System. The EOR may also provide advice to the End Customer regarding inspection services to ensure that the project is constructed according to the Manufacturer's erection drawings.

While not recommended practice, if the End Customer does not retain a Design Professional or EOR, it is the responsibility of the End Customer to specify the design criteria to be used for the Metal Building System including all applicable design loads.

It is the responsibility of the Builder to interpret all aspects of the End Customer's specifications and incorporate the appropriate specifications, design criteria, and design loads into the Order Documents submitted to the Manufacturer.

When specified by the Order Documents, the Manufacturer is responsible for supplying adequate evidence of compliance with the specifications, design criteria, and design loads, and other specified information necessary for the Builder or Design Professional to incorporate the Metal Building System into the Construction Project.

In the event of discrepancy between the plans and the specifications for the Metal Building System, the plans govern. In the event of discrepancy between scaled dimensions and numerical dimensions on the plans, included as part of the Order Documents, the numerical dimensions govern. In the event of discrepancy between the plans and specifications prepared by the Registered Design Professional or EOR and the Order Documents, the Order Documents govern.

3.2 End Customer Responsibility

3.2.1 General

The End Customer is responsible for identifying all applicable building codes, zoning codes, or other regulations applicable to the Construction Project, including the Metal Building System.

It is the responsibility of the End Customer to prepare complete specifications including the applicable design criteria, codes, standards, and regulations, and all the design loads or other requirements which affect the design, manufacture or erection of the Metal Building System. The following information must be supplied to the Builder by the End Customer or their Design Professional. This information must, in turn, be supplied to the Manufacturer by the Builder:

1. The building geometric requirements such as length, width, height, roof shape and slope, and clearance requirements, both vertical and horizontal.
2. The applicable code or standard, including the specific edition, that describes the application of design loads to the Metal Building System.
3. The applicable design loads including Live, Snow, Wind, Tornado, Seismic, Collateral and Auxiliary loads, including information concerning Collateral and Auxiliary loads required by the Manufacturer to enter the order. Unless design loads or conditions are specifically set out in the Order Documents, the Manufacturer assumes that no such loads or conditions exist.
4. All coefficients or factors (e.g., Exposure, Importance, Risk Category, etc.) necessary to adjust general or commonly used values in the specified design standard or code for the local site conditions and specified conditions of use.
5. Site and construction conditions that affect design criteria such as conditions causing snow drifting, including location of adjacent structures.
6. Open wall conditions.
7. All information necessary to ensure that the Metal Building System can be designed to comply with the specified code or standards and is compatible with other materials used on the Construction Project.
8. All serviceability criteria limiting vertical or horizontal deflection of components or gross building drift that are necessary to ensure that the stiffness of the Metal Building Systems is suitable for its specific conditions of use and compatible with materials not included in the Metal Building System.
9. In the design of the Metal Building System, the End Customer is responsible for providing clearances and adjustments of material furnished by other trades to accommodate all of the tolerances of the Metal Building System.

3.2.2 Foundation Design

The Manufacturer is not responsible for the design, materials or workmanship of the foundation. Anchor rod plans prepared by the Manufacturer are intended to show only location, diameter, and projection of anchor rods required to attach the Metal Building System to the foundation. The Manufacturer is responsible for providing to the Builder the loads imposed by the Metal Building System on the foundation. It is the responsibility of the End Customer to ensure that adequate

provisions are made for specifying anchor rod embedment, bearing angles, tie rods, and/or other associated items embedded in the concrete foundation, as well as foundation design for the loads imposed by the Metal Building System, other imposed loads, and the bearing capacity of the soil and other conditions of the building site. This is the responsibility of the Registered Design Professional or Engineer of Record.

3.2.3 Ventilation, Condensation and Energy Conservation

The Manufacturer does not design or check the ventilation, condensation or energy conservation system unless specified in the Order Documents and is not responsible for the adequacy of the specified ventilation, condensation, and energy conservation components, even if the Manufacturer supplies any or all of the ventilation, condensation, and energy conservation components as part of the sale of the Metal Building System. The End Customer assures that adequate provisions are made for ventilation, condensation, and energy conservation requirements. The MBMA *Energy Design Guide for Metal Building Systems* and *Energy Code Compliance: A Guide for Metal Building Contractors*, both provide information regarding energy code compliance.

3.2.4 Framed Openings

The design of framed openings in accordance with the design loads specified by the Order Documents is the responsibility of the Manufacturer. Design of materials supplied by others to be installed in these openings is the responsibility of the End Customer. It is the responsibility of the End Customer to supply to the Builder design loads and other requirements which affect the design of the Metal Building System and its compatibility with other materials. The Builder must incorporate these requirements into the Order Documents.

3.2.5 Effect on Existing Buildings or Structures

The Manufacturer does not investigate the influence of the Metal Building System on existing buildings or structures. The End Customer assures that such buildings and structures are adequate to resist snow drifts or other conditions as a result of the presence of the Metal Building System addition. The Manufacturer recommends that a Registered Professional Engineer be hired to evaluate the existing buildings or structures to accommodate the addition of the new Metal Building System.

3.2.6 Inspection

The Manufacturer is not responsible for the inspection of a Construction Project unless specifically incorporated into the Order Documents. Typically, a Manufacturer is limited because of logistical constraints as well as not having the expertise in inspection services. Furthermore, a Manufacturer is not in the best position to inspect the work of the Builder who is the Manufacturer's customer.

The Builder's commitment to a quality assurance program is important to the overall success of a project. The International Accreditation Services AC 478 *Accreditation Criteria for Inspection Practices of Metal Building Assemblers* helps companies assess and refine their management practices, safety and training programs, and job-site inspection programs.

Ideally, an End Customer should utilize inspection services for the project to provide this important function. The IBC discusses inspections in Chapter 1, Section 110. The 2024 edition of the IBC introduces special inspection requirements for Metal Building Systems in Section 1705.2.6. The End Customer or their Design Professional must be familiar with these sections to determine what inspections may be required to comply with the code, and to determine who is responsible for performing these inspections. The MBMA *Guide for Inspecting Metal Buildings Systems* is a valuable resource for information regarding the inspection of Metal Building Systems.

3.3 Manufacturer's Responsibility

3.3.1 General

The Manufacturer is responsible for the design of the Metal Building System as defined by the Order Documents, and for providing engineering data, drawings, and other documents as required by the Order Documents.

3.3.2 Engineering Data

The Manufacturer provides a Letter of Certification, design calculations, or other engineering data specified in the Order Documents.

The Letter of Certification and design calculations are sealed by the Manufacturer's Engineer who is a Registered Professional Engineer in the jurisdiction where the Construction Project is located. Erection drawings may or may not be required to be sealed based on individual state rules and local requirements. In any event, the supplying of sealed engineering data and drawings for the Metal Building System does not imply or constitute an agreement that the Manufacturer or Manufacturer's Engineer is acting as the Engineer of Record or Design Professional for a Construction Project.

The Letter of Certification states the order number and lists the design criteria including design codes, standards, loads and other design information supplied to the Manufacturer as provided in Section 3.2, and certifies that the structural design complies with the requirements of the Order Documents.

Design information that must be contained on the "Construction Documents" is listed in the applicable edition of the IBC, Section 1603. For the Metal Building System, the Metal Building Erection Drawings and the Letter of Certification can constitute part of the total Construction Documents. The Erection Drawings and/or the Letter of Design Certification would contain the loading documentation that is pertinent to the design of the Metal Building System.

Design calculations include the information contained in the Letter of Certification plus structural design data for the framing members and covering of the Metal Building System necessary to show compliance with the Order Documents. The structural design data includes magnitude and location of design loads and support conditions, material properties, and the type and size of major structural members.

Design calculations may be manually or computer generated at the discretion of the Manufacturer, and are in accordance with the Manufacturer's commonly employed procedures and standards unless otherwise specified by the Order Documents.

The 2024 IBC, Section 1704.5, states that at completion of fabrication the approved fabricator is required to submit a "certificate of compliance" to the owner or the owner's authorized agent for submittal to the building official. If required, the manufacturer would provide this document, stating that the fabrication was performed on the premises of the approved fabricator and in accordance with the manufacturer's plans and order documents. See Chapter VI for additional information on the IAS AC472 Accreditation Program regarding approved fabricators.

Testing by an independent laboratory or by the Manufacturer may be conducted on components and systems at the discretion of the Manufacturer. Reports of such tests may be part of the adequate evidence necessary to show compliance with the Order Documents.

3.3.3 Approval Documents

When required by Order Documents, approval documents including plans, design calculations, and other specified information are furnished by the Manufacturer to the Builder for approval. In order for the Manufacturer to proceed with preparation of fabrication drawings and the manufacture of the Metal Building System, the Builder returns one set of approval documents to the Manufacturer with appropriate notations of outright approval or approval subject to the Builder's requested changes or corrections.

Approval by the Builder without any changes or corrections affirms that the Manufacturer has correctly interpreted the Builder's requirements as set forth in the Order Documents.

If there are differences between the approval documents as prepared by the Manufacturer and the Order Documents, the approval documents take precedence.

If the Builder returns the approval documents with requested changes, additions or corrections, the documents shall be considered as a request to modify the Order Documents and must be agreed to by the Manufacturer pursuant to the provisions of Paragraph 2.2. If the approval documents with requested changes, additions or corrections are not returned to the Manufacturer and approved pursuant to the provisions of Paragraph 2.2, the requested changes, additions or corrections are not binding on the Manufacturer.

The Builder may incorporate the Manufacturer's approval data into documents submitted for the approval of the Contractor, General Contractor, Construction Manager or End Customer. In this event, only the Builder's approval or the Builder's requested changes and corrections are applicable to the Order Documents.

3.3.4 Plans

When approval documents are not required or the Builder has approved the Manufacturer's approval documents, the Manufacturer prepares fabrication drawings and provides the Builder with prints of the final anchor rod plans, erection drawings and erection instructions.

3.3.5 Fabrication Drawings

Fabrication drawings are not furnished by the Manufacturer.

3.3.6 Quality Assurance

Manufacturers are responsible for assuring quality in the Metal Building System. A quality control program verified by an outside inspection agency, similar to the IAS AC472 Accreditation program described in Chapter VI of this Manual, will satisfy this responsibility.

3.3.7 Building Information Modeling (BIM)

BIM is a process that utilizes a 3D model that allows project teams to collaborate holistically from project conception to construction. If it is a contract requirement, the metal building manufacturer should be informed during the bid/pricing phase of the project. The Builder needs to provide to the manufacturer the intended use of the model, the LOD (Level of Development) requirements for each model element, and any schedule expectations. Other information that a metal building manufacturer may need to know includes:

- File type format and software version if other than IFC (Industry Foundation Class) are required for the project.
- The coordination expectations.

The model provided by the metal building manufacturer represents the building as ordered and adjustments to the model after delivery is a service not typically included.

Section 4 – Materials and Fabrication

4.1 Materials and Material Tests

4.1.1 Materials

All materials used in the fabrication of Metal Building Systems shall be new and meet or exceed the physical requirements of the Manufacturer's design and fabrication processes and shall be in accordance with the Manufacturer's standards, practices, and procedures unless otherwise specified by the Order Documents.

4.1.2 Material Tests

The Manufacturer orders material, mill, or metallurgical tests for steel inventory to verify that it meets the design criteria for strength and to ensure that these materials possess the qualities (including weldability) required by the fabrication process of each specific component of a Metal Building System. Each component is fabricated from inventory material specifically ordered for that component. The Manufacturer checks and retains test reports covering current inventory materials ordered for stock, but because it is impractical to do so since many components are mass produced, records are not maintained such that individual components can be identified with individual test reports. If requested, the Manufacturer furnishes test reports of current inventory materials. These practices of ordering, testing, stocking, and fabricating make it unnecessary and impractical for the Manufacturer to furnish test reports on the specific materials used in the manufacture of a specific Metal Building System. Any additional destructive or nondestructive tests shall be expressly provided in the Order Documents and are paid for by the Builder.

4.2 Fabrication

4.2.1 General

The Manufacturer is responsible for accurate, quality workmanship.

4.2.2 Fabrication Tolerances

The fabrication tolerances set forth in Section 9 are applicable to cold-formed structural members and built-up structural members. For hot-rolled structural shapes, the fabrication tolerances shall be in accordance with the applicable edition of *Specification for Structural Steel Buildings* published by the American Institute of Steel Construction, Inc. (AISC) The Manufacturer may vary specific tolerances if proper consideration is given to the effects that such variations may have on structural performance, fit-up, or appearance.

4.2.3 Welding Procedures

Welding procedures shall meet the requirements of the applicable welding code. Welding procedures may be prequalified or may be qualified by test in conformance with AWS D1.1 *Structural Welding Code—Steel* or AWS D1.3 *Structural Welding Code—Sheet Steel*, as applicable. These codes are published by the American Welding Society (AWS).

4.2.4 Single-Sided Web-To-Flange Welds

The metal building systems industry has pioneered the use of single-sided web-to-flange welding techniques. The use of single-sided welds is permissible in both the AISC and AWS Specifications, but proper controls on the welding techniques are required to make sure the welded joint is properly executed.

The web-to-flange welds in metal building systems are typically not loaded in tension but are primarily loaded in shear. This permits the use of single-sided fillet welds without concerns of rotation about the longitudinal axis of the weld. However, if the fillet weld is subject to loads that impart significant rotation, stiffeners or other means should be used to preclude this rotational loading on the weld.

Automatic welding equipment revolutionized the shop fabrication of large steel members during the middle of the 20th century. The development of pull-through automatic welding machines, where the member component web and flanges are pulled past welding nozzles, has greatly contributed to the use of steel in building construction. The economic use of steel for large clear span frames was the initial driving force in the use of welded, web-tapered members. Advanced technology in the form of the pull-through automatic welding machine utilizing single-sided welding has led to the general use of prismatic and web-tapered members for all types of rigid frame and braced frame applications. This method of steel member fabrication is part of the IAS AC472 Accreditation program.

The metal building systems industry has sponsored research involving a large number of tests of rigid frame components. The great majority of these tests were conducted using built-up beams and columns with single-sided web-to-flange welds. Dr. Joseph Yura, Professor Emeritus, University of Texas, conducted tests to evaluate the ultimate strength of welded slender-web girders. In this test program, 24-foot long girders were tested to maximum load and beyond to produce very severe buckling deformations. The thirty girders tested had five different web depths and two different flange thicknesses. All the girders were fabricated with a single-sided fillet weld connecting the web plate to the two flange plates using an automatic submerged - arc process following AWS D1.1 procedures. The beams were loaded into the inelastic range of behavior. All the test beams ultimately failed by lateral buckling, local flange buckling or web buckling. The local flange buckling failures applied a severe loading condition to the single-sided weld but the tests resulted in no change in the 90-degree angle between the flange and the web plates. The single-sided welds ultimately performed very well with no weld failures.

A deviation from the general pattern of the acceptability of single-sided fillet welds occurs when seismic detailing of end-plate connections is required for intermediate and special moment frames. AISC 358, Section 6.3.1(1) requires that fillet welds on both sides of the web, or CJP groove weld, be provided for the web to flange connection for a distance from the end plate of at least the depth of the web, or three times the width of the flange, whichever is less.

4.2.5 Structural Framing Shop Paint

It is common industry practice for Manufacturers to use a shop paint on primary and secondary structural members. Shop paint is sometimes referred to as shop coat or primer and is not to be construed as a finish coat paint.

All structural members of the Metal Building System not fabricated of corrosion resistant materials or protected by a corrosion resistant coating are painted with one coat of shop paint. All surfaces to receive shop paint are cleaned of loose rust, loose mill scale and other foreign matter by using, as a minimum, the hand tool cleaning method SSPC-SP2 prior to painting. The Manufacturer is not required to power tool clean, sandblast, flame clean, or pickle. The coat of shop paint is intended to protect the steel framing for only a short period of exposure to ordinary atmospheric conditions. The coat of shop paint does not provide the uniformity of appearance, or the durability and corrosion resistance of a field applied finish coat of paint over a shop paint.

Pre-painted cold-formed material may be used at the Manufacturer's option. It will be cleaned according to SSPC-SP8 or SP6 before being coated with a polyester based coating. The coating may contain a wax-type lubricant to facilitate roll forming. Special field preparation to the pre-painted cold-formed material may be required before an additional coating can be applied.

The Manufacturer is not responsible for the deterioration of the shop paint, or corrosion that may result from exposure to atmospheric and environmental conditions, nor the compatibility of the shop paint to any field applied coating. Minor abrasions to the shop paint caused by handling, loading, shipping, unloading and erection after painting are unavoidable. Any touch-up painting of these minor abrasions is the responsibility of the End Customer.

Shop painted steel which is stored in the field pending erection should be kept free of the ground, and so positioned as to minimize water-holding pockets, dust, mud, and other contamination of the shop paint. Repairs of damage to shop painted surfaces and/or removal of foreign material due to transportation (e.g. road salt, de-icing chemicals and other substances encountered during transportation that may accelerate deterioration of the shop paint or corrosion of the underlying steel), improper field storage, or site conditions are not the responsibility of the Manufacturer.

Shop painted steel may require field touch-up as a result of damage to the coating caused by bundling, banding, hooks, chains, forks, foreign material, etc. Rusting may occur at such abrasions.

There has been considerable confusion regarding the Federal Standards TT-P-636D (Rust Inhibiting Red Oxide Primer) and TT-P-664D (Primer Coating, Alkyd, Corrosion-Inhibiting, Lead and Chromate Free, VOC Compliant) for primers. Federal Standard TT-P-636D has been obsolete since 1988 but still appears inappropriately in specifications. Many of the provisions within that specification are now contrary to environmental rules and law. Federal Standard TT-P-664D is a quantitative and qualitative specification that can run counter to state and local environmental standards.

There has also been confusion about the suitability of a shop applied paint and a field applied finished paint system. The Manufacturer will provide the Manufacturer's standard one-coat shop applied paint unless otherwise specified in the Order Documents. The End Customer is responsible for determining the compatibility of any coating systems to be applied over the Manufacturer's standard one-coat shop paint.

When specifically required in the Contract Documents, the Manufacturer may have the ability to provide or contract for other coating systems, however, the Manufacturer shall provide the Manufacturer's standard one-coat shop applied paint unless otherwise specified in the Order Documents. The End Customer should give very careful consideration to this matter. Due to strict environmental standards, the manufacturer may have to send the structural steel to a specialty-coating firm for application of a special primer and/or a finish paint system. There are a significant number of different coating systems available. The End Customer must fully investigate, select and specify the exact primer and finish coating system required. Some of the issues the End Customer should consider include compatibility between primer and finish coat, durability, color availability, cost, gloss and abrasion resistance. If handling of the structural members after painting is of major concern, the End Customer may want to consider field painting by a specialty paint contractor.

4.2.6 Piece Marking and Identification

All individual parts or bundles and packages of identical parts are clearly marked for verification and erection identification. Bolts and fasteners are packaged according to type, size, and length. Loose nuts and washers are packaged according to size. The shipping documents include a shipping list, which shows the quantity, description and piece mark of the various parts.

4.2.7 Inspection

Material and parts are inspected by the Manufacturer during fabrication in accordance with the Manufacturer's quality assurance program. Any additional inspections desired by the End Customer must be expressly provided in the Order Documents by the Builder and are performed in the Manufacturer's plant, the cost of which is paid by the Builder.

4.2.8 Loading

Materials are packaged in accordance with the Manufacturer's standards and loaded in the manner and sequence most convenient and economical for the Manufacturer unless otherwise provided by the Order Documents.

Materials are commonly fabricated for loading on 40 to 56 foot, flatbed, open trailers. If the Builder or the Builder's common carrier requires special size, packaging, and loading of materials, all such requirements must be specified on the Order Documents. The carrier is responsible for securing materials loaded for delivery by truck. The Manufacturer is not responsible for the adequacy or legality of the carrier's load or equipment.

Section 5 – Delivery and Receipt

5.1 Delivery

Transportation may be by the Builder or the Manufacturer as specified in the Order Documents. In any event, Metal Building System materials are delivered in the order or sequence that is most convenient and economical to the Manufacturer unless otherwise specified in the Order Documents. If materials are transported by a common carrier, the Builder is bound by the rules pertaining to shipment and receipt by common carrier. Materials may not be returned to the Manufacturer without the Manufacturer's prior written authorization.

If transportation is by the Builder, delivery is made to the Builder at the Manufacturer's plant and the Builder is responsible for receipt at the Manufacturer's plant as provided herein. The Builder may subcontract all or part of the transportation to a common carrier. If the Builder subcontracts transportation, the common carrier is responsible for receipt of materials at the Manufacturers' plant and transportation of materials to the delivery address, and the Builder is responsible for receipt of materials at the delivery address as provided herein. The Builder may subcontract receipt of materials to the Erector or the Contractor.

If transportation is by the Manufacturer, delivery is made to the Builder at the nearest accessible point to the delivery address specified in the Order Documents and the Builder is responsible for promptly receiving materials as provided herein. The Manufacturer may subcontract all or a part of the transportation to a common carrier. In any event, the Builder or the Erector is not a borrower of the carrier's equipment during unloading or any other operation.

5.2 Receipt

5.2.1 Short Materials

Immediately upon delivery of material, material quantities are verified by the Builder against quantities billed on shipping documents. Neither the Manufacturer nor the carrier is responsible for material shortages against quantities billed on shipping documents if such shortages are not noted on shipping documents upon delivery of material and acknowledged by the carrier's agent. If the carrier is the Manufacturer, claim for shortages is made by the Builder to the Manufacturer. If the carrier is a common carrier, claims for shortages are made by the Builder to the Manufacturer. If the material quantities received are correct according to the quantities billed on the shipping documents, but are less than the quantities ordered or the quantities that are necessary to complete the Metal Building System according to the Order Documents, claim is made to the Manufacturer.

5.2.2 Damaged Material

Damaged material, regardless of the degree of damage, shall be noted on the shipping documents by the Builder and acknowledged in writing by the carrier's agent. The Manufacturer is not responsible for material damaged in unloading or for packaged or nested materials, including, but not limited to, fasteners, sheet metal, "C" and "Z" sections, and covering panels that become wet

and/or are damaged by water or other environmental exposures after leaving the metal building system manufacturing facility. Packaged or nested materials that become wet in transit shall be unpacked, unstacked and dried by the Builder. For additional information refer to Section 4.2.5.

If the carrier is the Manufacturer, claim for damage shall be made by the Builder to the Manufacturer. If the carrier is a common carrier, claim for damage shall be made by the Builder to the common carrier. The Manufacturer is not liable for any claim whatsoever including, but not limited to, labor charges or consequential damages resulting from the Builder's use of damaged materials that can be detected by visual inspection.

5.2.3 Defective or Incorrect Materials

Claim for defective or incorrect material shall be made by the Builder to the Manufacturer. Pictures of the defective or incorrect materials may expedite the claim process. The Manufacturer is not liable for any claim whatsoever, including, but not limited to, labor charges or consequential damages, resulting from the Builder's use of defective or incorrect materials that can be detected by visual inspection.

5.2.4 Excess Materials

The Manufacturer reserves the right to recover any materials delivered in excess of those required by the Order Documents.

Section 6 – Erection and Other Field Work

6.1 General

The Manufacturer of a Metal Building System is not responsible for the erection of the Metal Building System, the supply of any tools or equipment, or any other field work unless it has specifically contracted for these responsibilities. The Manufacturer does not provide any field supervision for the erection of the structure nor does the Manufacturer perform any intermediate or final inspections of the Metal Building System during or after erection. The term "Erector" in the following subparts refers to whichever firm or corporation has contracted to erect the Metal Building System.

6.2 Metal Building Systems Erection and Other Field Work

All work included in the erection of the Metal Building System shall be in accordance with the Erector's standard methods, practices and procedures unless otherwise specified in the Erector's Contract.

When erection of the Metal Building System is included in the Contract Documents, only the erection work listed in the Contract Documents is included in the Metal Building System erection.

6.2.1 Work Usually Included in Erection

The Erector furnishes:

1. All field labor, tools, and equipment necessary to unload at the building site and to completely erect, safely and properly, the Metal Building System. Some standard and non-standard components and accessories of a Metal Building System including, but not limited to, field located openings, special framing, flashing, trim, etc., require minor field modification and fitting.
2. Labor to provide for a reasonable level of connection shimming (e.g. to adjust for fabrication and/or erection tolerances and variations in anchor rod placement and foundation level).
3. The compressed air and electric power required for the Metal Building System erection if commercial power is not available at the job site.
4. Labor to remove Erector's temporary buildings, unused material and rubbish from the job site.
5. Field touch-up of the primed steel.
6. Temporary guys and bracing where needed for squaring, plumbing and securing the structural framing against loads, e.g. wind, snow, seismic forces, etc., acting on the exposed framing comparable in intensity to those for which the completed structure is designed, as well as loads due to erection equipment and erection operation, but not including loads resulting from the performance of work by others. Bracing furnished by the Manufacturer for the Metal Building System cannot be assumed to be adequate during erection. The temporary guys, braces, falsework and cribbing are the property of the Erector, and the Erector removes them immediately upon completion of erection. A suggested resource is

Temporary Bracing Guidelines, available from the Metal Building Contractors and Erectors Association (MBCEA) through their Metal Building Institute. This guide was developed to assist metal building contractors and erectors with respect to temporary bracing and sequencing requirements for each metal building project.

6.2.2 Work Usually Not Included in Erection

Due to the widely varied types of work encountered in conjunction with the construction of metal building system projects, the following is a partial list of the types of work not included in the erection of the Metal Building System unless indicated otherwise in the Contract Documents:

1. Receipt of materials, including inspection for missing or damaged materials.
2. Site work.
3. Foundation, concrete or masonry work.
4. Setting or inspection of setting of anchor rods, leveling plates, templates, column base tie rods or any item to be set or imbedded in concrete or masonry.
5. Grouting or filling of any kind under columns or door jambs or in the recess at the base of wall panels.
6. Glazing for the Metal Building System accessories.
7. Field painting of primed steel and/or bolts.
8. Commercial power, if available, including temporary power pole adjacent to the building.
9. Interior finishing or carpentry work of any kind.
10. Flashing, cutting, drilling or otherwise altering the Metal Building System, as required, for the assembly or installation of accessories, materials, or equipment supplied by other trades.
11. Glass cleaning.
12. Electrical, mechanical, masonry or fireproofing work.
13. Assembly and/or installation of materials or accessories not delivered as a part of the Metal Building System.
14. Site specific safety training, fire resistant clothing and air quality monitors.

6.3 Site Survey

The End Customer, upon execution of the contract, furnishes a current correct survey of the site certified by a Registered Professional Land Surveyor and showing property lines and encroachments, benchmarks, adjacent tracts, recorded or visible easements or rights of way easements known to the surveyor or easements for utilities and access restriction to adjacent streets. In addition, the End Customer causes property lines to be accurately staked on the job site and accurately identified to the Erector.

6.4 Concrete Slab, Foundation and Anchor Rod Setting

The End Customer is responsible for all additional costs resulting from errors in the concrete slab and foundation or in the setting of anchor rods, except where the concrete slab and foundation are constructed by the Builder. The Erector is responsible for ensuring that concrete dimensions and anchor rod locations are correct before setting any steel.

6.5 Interruptions, Delays, or Overtime Wages

The contract consideration for erection and other field work is computed on the basis of a normal forty-hour (five eight-hour days) work week (excluding Saturdays, Sundays, and recognized holidays). Any additional cost incurred by the Erector through interruptions, delays, errors, or overtime wages caused by the End Customer or the End Customer's contractors, is paid by the End Customer. Interruptions include call backs to complete portions of the erection or other field work that is postponed at End Customer's request.

6.6 Hazardous Job Site Conditions

If hazardous job site conditions prohibit the use of exposed arcs, standard electric motors or normal erection tools and equipment, the End Customer is responsible for any additional costs resulting from such prohibition.

6.7 Accessibility of Job Site and Building Floor Area

The contract consideration for erection is based upon the Erector being furnished a job site that is clean, level, fully accessible to trucks for delivery of materials and to erection equipment, and sufficiently compacted to support and permit ready movement of such trucks and equipment. In addition, the Erector is furnished access to the building floor area, together with a level and compacted work area outside the building at least twenty feet wide on all sides of the building. This work area shall be free of any existing structures not being tied into by the Metal Building System, property lines, fences, overhead obstructions, pits, machinery, ditches, pipe lines, electric power lines, unsafe or hazardous conditions or other obstacles and shall be fully accessible to the Erector's employees, trucks and erection equipment to deliver, store, and lay out materials and to erect the Metal Building System. The End Customer pays to the Erector any additional costs incurred by the Erector resulting from the End Customer's failure to furnish the foregoing.

6.8 Erection Tolerances

Erection tolerances are those set forth in the applicable edition of the AISC *Code of Standard Practice for Steel Buildings and Bridges*.

Variations are to be expected in the finished overall dimensions of structural steel frames. Such variations are deemed to be within the limits of good practice when they do not exceed the cumulative effect of rolling, fabricating and erection tolerances.

When crane support systems are part of a Metal Building System, erection tolerances for crane runway beams given in Table 6.1 are applicable. To achieve the required tolerance, grouting of columns and shimming of runway beams may be required. If grouting of column bases is required, the End Customer shall provide such grouting. The party erecting the runway beam is responsible for shimming, plumbing, and leveling of the runway beams. When aligning the runway beams, the alignment should be with respect to the beam webs so that the center of the aligned rail is over the runway beam web.

6.9 Method or Sequence of Erection

The Erector, by entering into a contract to erect the Metal Building System, holds itself out as skilled in the erection of Metal Building Systems and is responsible for complying with all applicable local, federal and state construction and safety regulations including OSHA regulations as well as any applicable requirements of local, national or international union rules or practices.

The Manufacturer may supply erection drawings and instructions suggesting the sequence of erection and appropriate connections of the Metal Building System components. The erection drawings are not intended to specify any particular method of erection to be followed by the Erector. The Erector remains solely responsible for the safety and appropriateness of all techniques and methods utilized by its crews in the erection of the Metal Building System. The Erector is also responsible for supplying any safety devices, such as fall protection, man lifts, runways, nets, etc. which may be required to safely erect the Metal Building System.

6.10 Installation of Bolts

The proper installation of all bolts is the responsibility of the Erector. The metal building manufacturer will indicate on the construction drawings which bolts are permitted to be installed snug-tight, and which bolts must be pretensioned.

6.10.1 Tightening of Bolts

AISC and RCSC Specifications permit ASTM F3125 Group 120 (formerly A325) bolts to be snug-tightened in most metal building applications except for those used in the supporting structure for cranes over 5-ton capacity or high seismic applications (See Ref. B8.58). ASTM F3125 Group 120 bolts that require pretensioning, and all Group 150 bolts (formerly A490) must be tightened by one of the methods permitted in RCSC. The MBMA *Guide for Inspecting Metal Building Systems* has a summary of the installation methods as well as a discussion of inspection requirements associated with each installation method.

Turn-of-the-nut installation is the most common method used for pretensioning bolts and is compatible with the materials typically supplied by the manufacturer. If another of the pretensioning methods is to be used, it must be specified by the End Customer in the Contract Documents.

6.10.2 Pre-Installation Verification Procedure

All methods of pretensioning bolts require a pre-installation verification procedure. The purpose of this verification procedure is to ensure that the installation method being used achieves the required minimum pretension in the bolt. It is not a quality control test of the bolts. All pre-installation verification must be run against each combination of bolt length and diameter used. Bolts of the same length and diameter from different lots must both undergo pre-installation verification. The inspector should observe the test to verify conformance to the specification. Note that when the calibrated wrench installation method is used, pre-installation verification must be performed daily prior to the start of bolt tightening for each installation wrench.

For pre-installation verification, a bolt tension measurement device (e.g. Skidmore-Wilhelm) is used to verify the specified pretension. The measurement device instructions must be followed to ensure an accurate test. Three samples of each combination of bolt and nut lot to be used on the job must be tested. The verification includes (1) bring the bolting assembly to a snug-tightened condition in the measurement device using the tools and installation methods to be used in the work, (2) complete tightening following the installation method, and (3) compare the pretension indicated by the measurement device to the required minimum pretension.

There are several reasons why the required minimum pretension might not be achieved in compatible nuts and bolts. These include (1) the manufacturer's instructions of the measurement device were not properly followed, (2) the initial snug-tightened condition was not properly achieved, (3) white rust is present and/or loss of lubrication due to improper storage, or (4) over galvanization of bolts. It is recommended that the test be redone, paying particular attention to the initial snug-tight condition. For the turn of the nut installation, pretension can be improved by using bolt lubrication and increasing the amount of nut rotation. Note that any lubrication used or additional rotation will then be required for the installation of all the bolts in that lot.

6.10.3 Use of Shims

Except for friction type structural connections (not normally utilized in metal building system design), visible gaps between column and/or rafter connection plates can occur as a result of various causes without critical effect to structural integrity. Minimal shimming at bolt locations is considered acceptable regardless of material yield and does not require full surface contact of the connection plates. The purpose of shimming, besides any aesthetic benefits, is to provide compressive force transfer at column and/or rafter flanges and to provide resistance to the tightening procedures of high-strength bolts for proper installation. A shim can be of uniform thickness, full size, tapered or notched around bolts to permit installation without the removal of bolts. Bolt holes oversized by 3/16 in. are permitted in full-size shims to facilitate alignment.

If the gap at or around bolts exceeds 1/16 in., shim(s) are required per AISC 360, Section M4.4. If the total shim thickness required exceeds ¼ in., AISC 360 Section J5.2 would require a design review of the connection strength. Therefore, the manufacturer may be notified when the shim thickness exceeds ¼ in. to evaluate the impact on the connection strength. A shim thickness equal to or below ¼ in. would not necessarily require the manufacturer to be contacted based on this AISC 360 requirement.

6.10.4 Inspection

If independent inspection services are to be provided in the field, it shall be as required by the Authority Having Jurisdiction or EOR. The Erector is responsible for ensuring that installation and inspection procedures are compatible prior to the start of erection.

To ensure that the installation sequence and procedure is compatible with the inspection sequence and procedure, the Erector should be notified of the inspection procedures prior to the start of building erection.

The Erector is responsible for maintaining the storage of unused bolts, nuts and washers in accordance with RCSC *Specification for Structural Joints using High-Strength Bolts*.

Table 6.1: Crane Runway Beam Erection

Item	Runway Beams	Tolerance	Maximum Rate of Change
Span	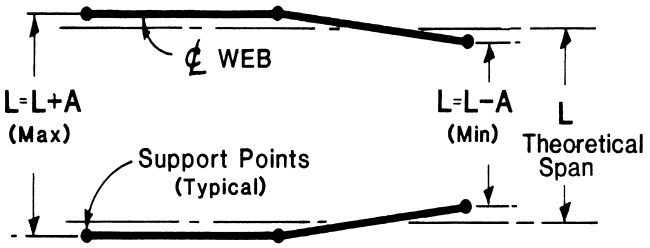	A = 3/8″	1/4″/20′
Straightness	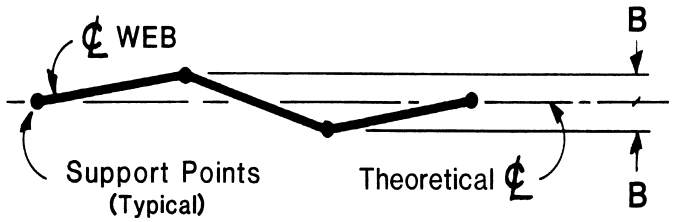	B = 3/8″	1/4″/20′
Elevation	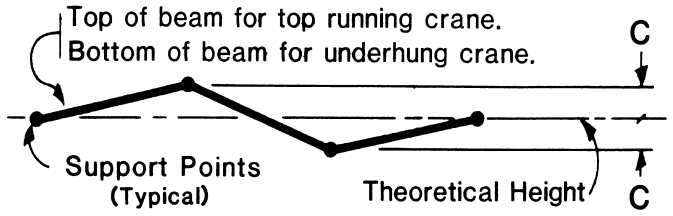	C = 3/8″	1/4″/20′
Beam to Beam Top Running	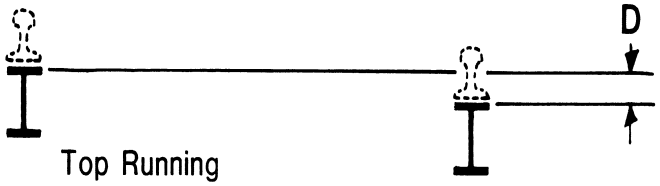	D = 3/8″	1/4″/20′
Beam to Beam Underhung	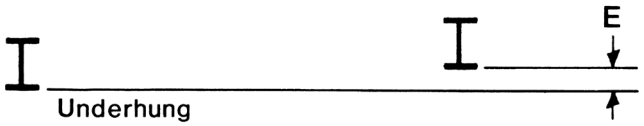	E = 3/8″	1/4″/20′
Adjacent Beams	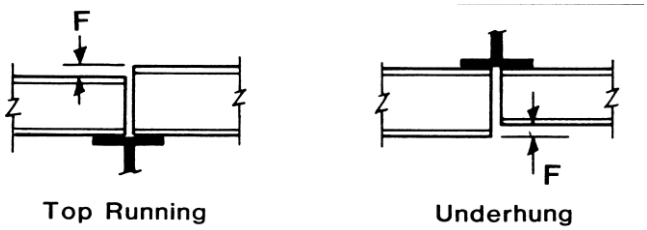	F = 1/8″	NA

6.11 Correction of Errors and Repairs

The correction of minor misfits by the use of drift pins to draw the components into line, shimming, moderate amounts of reaming, chipping and cutting, and the replacement of minor shortages of material are a normal part of erection and are not subject to claim.

The Manufacturer does not pay claims for error correction unless the following claim and authorization procedure is strictly complied with by the Builder, or if the corrective work is begun prior to receipt by the Builder of the Manufacturer's written "Authorization for Corrective Work." If erection is not by the Builder, the Erector is responsible for providing the Builder with the information necessary to make claim to the Manufacturer as provided below.

The Manufacturer is not liable for any claim resulting from the use of any drawings or literature not specifically released for construction or for erection for the project.

The Manufacturer is not liable for any claim resulting from use by the Erector of any improper material or material containing defects, which can be detected by visual inspection. Costs of disassembling such improper or defective material, and costs of erecting replacement material are not subject to claim.

6.11.1 Initial Claim

In the event of an error, the Builder shall promptly make a written or verbal "Initial Claim" to the Manufacturer for the correction of the design, drafting, bill of material or fabrication error. Pictures of the defective or incorrect materials may expedite the claim process. The "Initial Claim" includes:

1. Description of nature and extent of the errors including quantities.
2. Description of nature and extent of proposed corrective work including estimated man-hours.
3. Material to be purchased from parties other than the Manufacturer including estimated quantities and cost.
4. Maximum total cost of proposed corrective work and material to be purchased from parties other than the Manufacturer.

6.11.2 Authorization for Corrective Work

If the error is the fault of the Manufacturer, an "Authorization for Corrective Work" shall be issued in writing by the Manufacturer to authorize the corrective work at cost not to exceed the maximum total cost set forth.

Alternative corrective work other than that proposed in the "Initial Claim" may be directed by the Manufacturer in the "Authorization of Corrective Work." Only certain persons specifically designated by the Manufacturer may authorize corrective work.

6.11.3 Final Claim

The “Final Claim”, in writing, shall be forwarded by the Builder to the Manufacturer within ten (10) days of completion of the corrective work authorized by the Manufacturer. The “Final Claim” shall include:

1. Actual number of man-hours by date of direct labor used on corrective work and actual hourly rates of pay.
2. Taxes and insurance on total actual direct labor.
3. Other direct costs on actual direct labor.
4. Cost of material (not minor supplies) authorized by the Manufacturer to be purchased from other than the Manufacturer including copies of paid invoices.
5. Total actual direct cost of corrective work (sum of 1, 2, 3, and 4). The “Final Claim” shall be signed and certified true and correct by the Builder. “Final Claims” are paid to the Builder by the Manufacturer in an amount not to exceed the lesser of the maximum total cost set forth in the written “Authorization for Corrective Work” or the total actual direct cost of corrective work.
6. Cost of equipment (rental or depreciation), small tools, supervision, overhead and profit are not subject to claim.

Section 7 – Insurance

7.1 General

Insurance carried on each individual Metal Building System project is subject to negotiation by the contracting parties. The following is a listing of insurance that may be carried in total or in part by Manufacturers, Builders, Erectors, Contractors, General Contractors, and End Customers. It is essential that the End Customer verify the insurance carried by the Contractors and the General Contractor.

7.2 Manufacturer Insurance

1. Workman's Compensation
2. Comprehensive General Liability Including:
    - Bodily Injury
    - Property Damage (broad form)
    - Completed Operation--Product Liability
    - Contractual Liability (blanket form not excluding broad form agreement of specific contract form)
    - Personal Injury Liability
3. Comprehensive Automobile Liability Including:
    - Bodily Injury
    - Property Damage
    - Division I, Owned Automobiles
    - Division II, Hired Automobiles
    - Division III, Non-Ownership Liability
    - Collision
    - Comprehensive Including Fire and Theft
    - Medical Payments
    - Uninsured Motorist
4. Umbrella Excess Comprehensive General and Comprehensive Automobile Liability

7.3 Builder, Erector, Contractor and General Contractor Insurance

That insurance listed in Section 7.2, Manufacturer Insurance, plus contractor's equipment floater insurance.

7.4 End Customer Insurance

1. Comprehensive General Liability
2. Comprehensive Automobile Liability
3. Builder's Risk

7.5 Leased Equipment Insurance

The equipment owner carries a Contractor Equipment Floater on leased equipment and lists the equipment lessee as an additional insured on the floater policy or requires insurance carrier to waive subrogation against the equipment lessee.

7.6 Insurance Certificates

Upon request, the Builder, Erector, Contractor, General Contractor, and End Customer cause their insurance carrier to furnish to the other(s) a certificate of their respective insurance coverage expressly noted as to type of coverage, endorsements and limits of such insurance which have been negotiated between the End Customer and the Builder as contained in the Contract Documents. Such certificates provide that the carrier issue thirty days' notice of any changes to or cancellation of the insurance coverage.

Section 8 – General

8.1 Permits, Assessments, Pro Rata and Other Fees

The End Customer obtains and pays for all building permits, licenses, public assessments, paving or utility pro rata, utility connections, occupancy fees and other fees required by any governmental authority or utility in connection with the work provided for in the Contract Documents. The End Customer provides at his expense all plans and specifications required to obtain a building permit. It is the End Customer's responsibility to ensure that all plans and specifications comply with the applicable requirements of any governing building authorities.

8.2 Code or Deed Restriction Compliance

Due to the wide interpretations given to design standards, building codes, zoning codes, and deed restrictions encountered in the construction industry, the Manufacturer does not warrant the Metal Building System to comply with any building or zoning code requirements, permit requirement, deed restriction, design procedures, design load, material or equipment requirements, effect of (or on) existing structures, or fabrication procedures except those expressly set out in the Order Documents. Costs of any additions, deletions, modifications, or changes that may be required to comply with such codes, procedures or requirements which are not expressly set out in the Order Documents, must be paid by the Builder.

When the size, shape, general characteristics or design criteria of a Metal Building System are specified to the Manufacturer, the Manufacturer is not responsible for the suitability, adequacy, or legality of the Metal Building System or its design.

8.3 Postponement of Shipment

The consideration for the sale of the Metal Building System by the Manufacturer does not include provision for the cost of storage of the Manufacturer's products beyond the originally scheduled shipping date. If the Builder requests postponement of shipment of the Manufacturer's products beyond the originally scheduled shipping date, the Builder is responsible for payments as originally scheduled as well as any additional storage, handling, trailers, repainting, erection or other costs resulting from the requested postponement.

8.4 Penalties and Bonds

Unless otherwise specified in the Order Documents, the Manufacturer is not liable for any penalties or liquidated damages, regardless of cause, and does not furnish or pay for any performance, payment or maintenance bond. Likewise, unless specified in the Contract Documents, the Builder is not liable for any penalties or liquidated damages, regardless of cause, and does not furnish or pay for any performance, payment or maintenance bond.

8.5 Completion and Acceptance

Upon notice by the Builder or Erector to the End Customer of substantial completion of the work provided in the Contract Documents, the End Customer shall determine that the work provided in

the Contract Documents is satisfactorily completed, and deliver to the Builder or Erector a signed completion certificate noted as to any items in need of correction or completion. Failure of the End Customer to deliver such noted completion certificate, within ten days after notice of substantial completion, conclusively constitutes acceptance of the work as satisfactorily completed and waived by the End Customer. If the work provided in the Contract Documents is substantially complete, except for minor items noted on the completion certificate that cannot be promptly corrected or completed due to circumstances beyond the control of the Builder or Erector, the work provided in the Contract Documents is deemed complete. In addition, partial or complete occupancy of the building by the End Customer, or by others with permission of the End Customer, conclusively constitutes that the End Customer accepts the work as satisfactorily completed .

8.6 Indemnification for Modifications, Adaptations and Repairs

The End Customer agrees and obligates themselves to indemnify, hold harmless, and assume the defense of the Manufacturer, Builder, Erector, and their employees against any and all actions, claims, damage, liability, costs and expenses whatsoever in any manner resulting from or arising out of any modifications, adaptations, or repairs made to the Metal Building System or work of the Builder or Erector by employees or agents of the End Customer, unless authorized in writing by the appropriate parties.

8.7 Consequential Damages

The Manufacturer is not liable for any consequential damages including that resulting from late arrival of the Metal Building System material to the job site or from short, damaged, defective, incorrect or misfit materials.

8.8 Changes in Product or Standards

The Manufacturer may make changes in the Manufacturer's products and standards without notice.

8.9 Paragraph Headings

Paragraph headings are included for convenient reference and have no bearing on the interpretation of the wording of any paragraph and do not limit one practice to one heading or paragraph.

Section 9 – Fabrication Tolerances

9.1 Cold-Formed Structural Members

The fabrication tolerances indicated in Figure 9.1 for cold-formed structural members are defined in Table 9.1

Note that a sweep tolerance is purposefully not defined for cold-formed members. Cold-formed members such as cees and zees typically have an inherent lack of stiffness in the weak axis. Cold-forming induces residual stresses that may affect the overall straightness of the member in the sweep direction. Typical metal building applications for these members require stability bracing to attain a reasonable level of system strength and serviceability. During installation, discrete bracing or temporary blocking is installed prior to attachment of the roof or wall panel to the straightened cold-formed structural members that provides both lateral stability and a means to remove sweep in the final installation without requiring a specific sweep tolerance during fabrication.

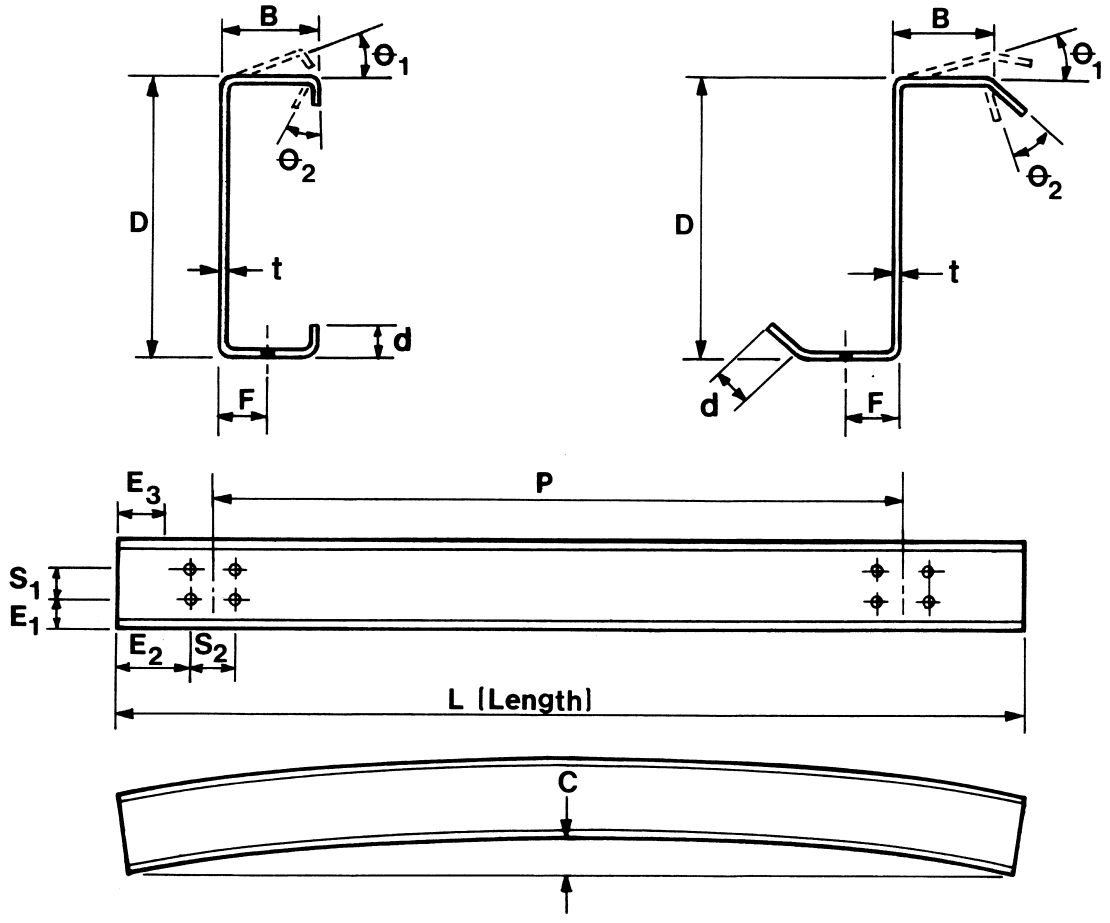

Figure 9.1: Cold-Formed Structural Members

Table 9.1: Cold-Formed Structural Members

	Dimension	Tolerance	
		+	-
Geometry	D	3/16"	3/16"
	B	3/16"	3/16"
	d	3/8"	1/8"
	θ_1	3°	3°
	θ_2	5°	5°
Hole Location	E_1	1/8"	1/8"
	E_2	1/8"	1/8"
	E_3	1/8"	1/8"
	S_1	1/16"	1/16"
	S_2	1/16"	1/16"
	F	1/8"	1/8"
	P	1/8"	1/8"
Length (L)		1/8"	1/8"
Camber (C)		1/4" x L (ft)/ 10	
Minimum Thickness (t)		0.95 (Design t)	

9.2 Built-Up Structural Members

The fabrication tolerances indicated in Figure 9.2(a) and 9.2(b) for built-up structural members are defined in Table 9.2.

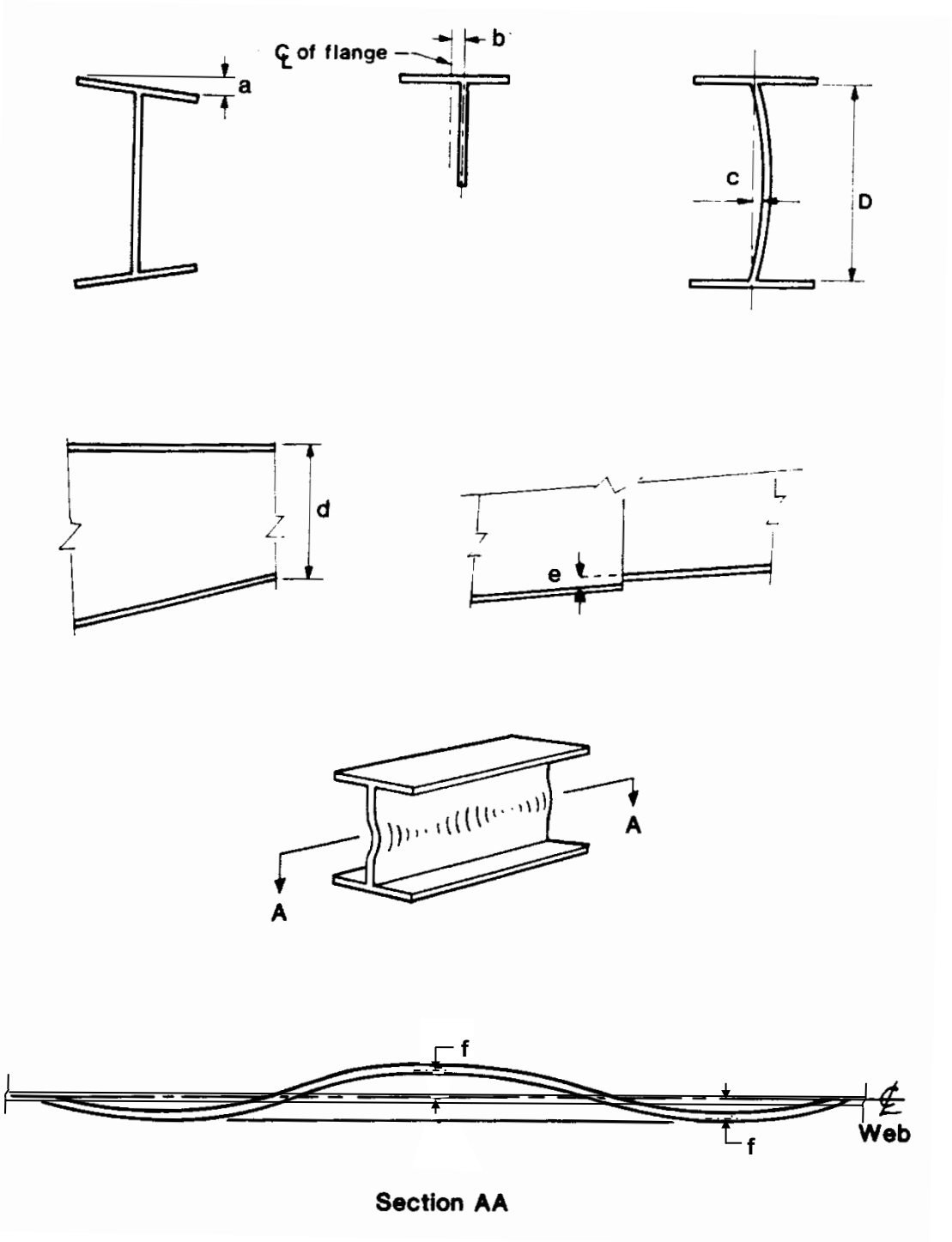

Figure 9.2(a): Built-Up Structural Member

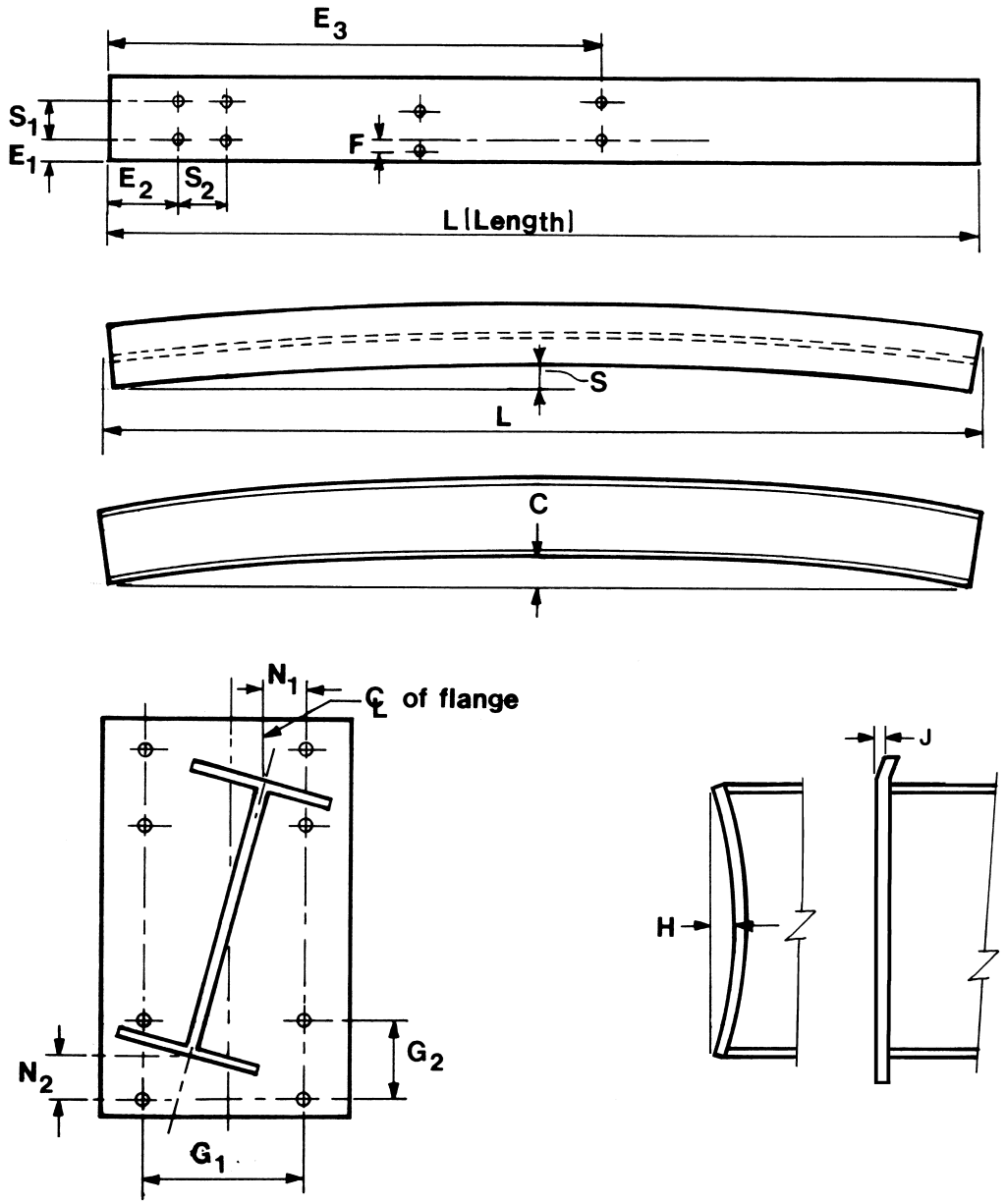

Figure 9.2(b): Built-Up Structural Member

Table 9.2: Built-Up Structural Members

	Dimension		Tolerance	
			+	-
Geometry	a		3°- 1/4" Max	3°- 1/4" Max
	b		1/4"	1/4"
	d		3/16"	3/16"
	e		1/8"	1/8"
	c		D/72"	
	f		D/72"	
Hole Location	E1		1/8"	1/8"
	E2		1/8"	1/8"
	E3		1/8"	1/8"
	S1		1/16"	1/16"
	S2		1/16"	1/16"
	F		1/8"	1/8"
Length (L)			1/4"	1/4"
Sweep[1] (S)				
			1/4" x L(ft)/ 10	
Camber[1] (C)			1/4" x L(ft)/ 10	
Splice Plates	N_1		1/8"	1/8"
	N_2		3/16"	3/16"
	G_1		1/16"	1/16"
	G_2		1/16"	1/16"
	H	Up to 24"	1/8"	1/8"
		24" to 48"	3/16"	3/16"
		Over 48"	1/4"	1/4"
	J [2]		1/4"	1/4"

[1]For hot-rolled sections used for crane runway beams, see AISC Design Guide 7 for sweep and camber recommendations.

[2]Tolerance dimension "J" is for a single piece. When two members are connected with both having this amount of endplate flare, the assembled joint may have gaps at or around bolts that exceed 1/16 in. See Section 6.10.3 for additional discussion on shims.





Common Industry Practices

MBMA
METAL BUILDING MANUFACTURERS ASSOCIATION®
Research | Leadership | Education